PLASTEC VENTILATION, INC.

www.plastecvent.net Phone: 941-751-7596 Fax: 941-751-7598

Submittal Data and Specifications

Polypropylene Weather Hood and Pedestal – Models WH3 and WH4

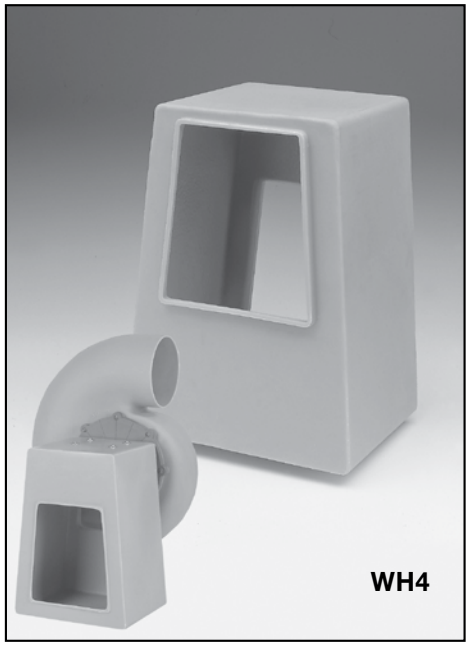

WH3

Description: A polypropylene enclosure for Utility Blower models P15 through P35. It is specially designed for Plastec Fans to protect the motor against weather and corrosive environments.

DIMENSIONAL DATA (inches)					
	A	B	C	D	E
WH3 is for Plastec 15-25 / Storm Series	22.125	16.00	13.50	13.50	10.50
WH4 is for Plastec 30, 35 / Storm Series	28.14	23.09	19.88	N/A	N/A

(WH4 includes SS Support Bracket for motor.)

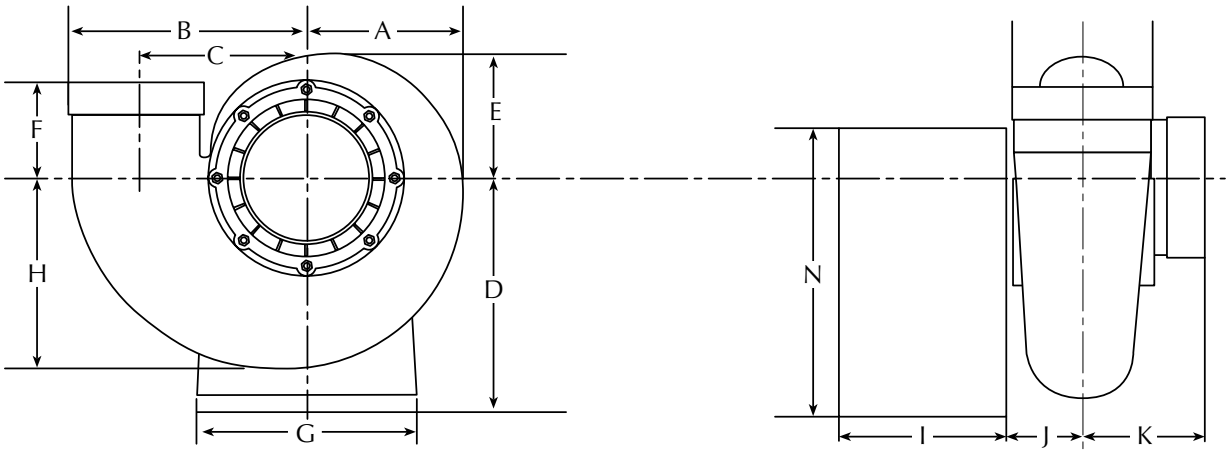

DIMENSIONAL DATA (inches)												
Blower Type	A	B	C	D	E	F	G	H	I	J	K	N
Plastec 15 - Storm 10	6.05	9.45	6.93	18.85	5.30	5.70	15.75	7.90	14.37	3.75	3.93	21.65
Plastec 20 - Storm 12	8.18	12.00	8.70	18.85	6.25	5.90	15.75	9.45	14.37	3.50	4.50	21.65
Plastec 25 - Storm 14	10.05	14.62	10.30	17.87	7.81	6.30	15.75	12.30	14.37	4.50	7.90	21.65
Plastec 30 - Storm 16	11.75	18.75	5.37	17.87	9.37	7.50	15.75	12.75	14.37	4.75	5.70	21.65
Plastec 35	14.56	22.44	16.25	23.14	11.81	5.11	23.03	17.71	19.88	6.69	8.26	28.14